DRAWING NUMBER
D 2501 8001-010

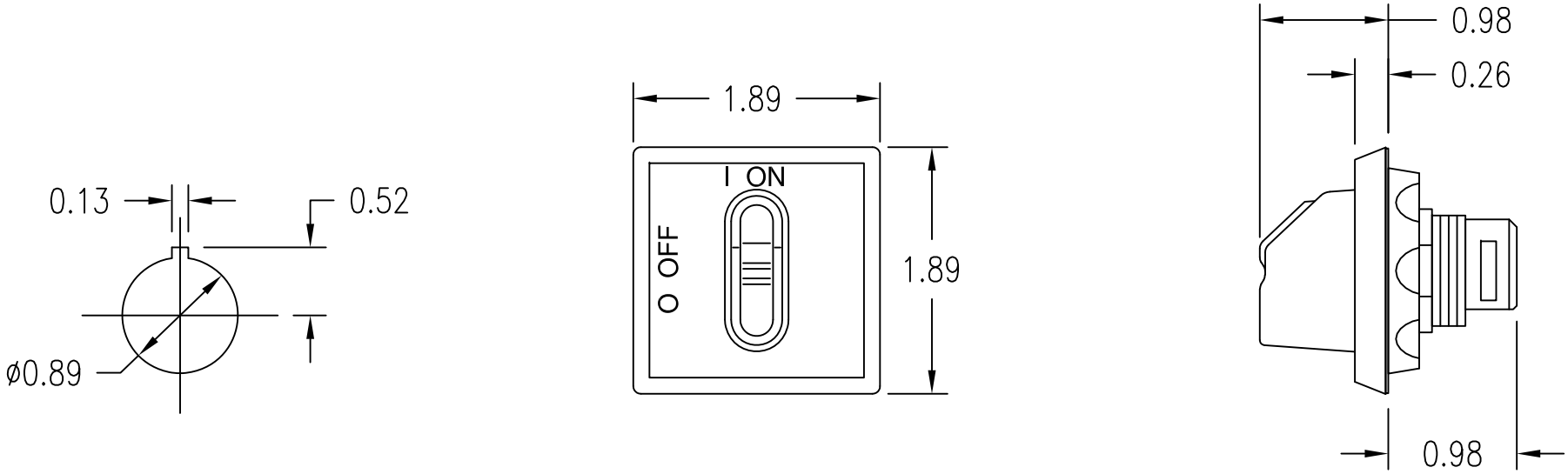

2-Position Switch Handles

Part Number	Shaft Size	Environmental Rating	Color	Defeatable
0HBS1PH	6mm	Type 1	Black	Yes
0HYS1PH	6mm	Type 1	Red/Yellow	Yes
0HBS3PH	6mm	Type 1, 3R, 12	Black	No
0HYS3PH	6mm	Type 1, 3R, 12	Red/Yellow	No

REV. LET.	REVISIONS	DATE	REV OR APPD BY

THIS DRAWING IS THE PROPERTY OF ABB Inc. AND CONTAINS PROPRIETARY AND CONFIDENTIAL INFORMATION WHICH MUST NOT BE DUPLICATED, USED OR DISCLOSED OTHER THAN EXPRESSLY AUTHORIZED BY ABB Inc.

ABB Inc.

DATE 1/27/09
DRAWN TSP
CHK'D
PROJECT NO.
SHEET 1 OF 1

REV. A
SIZE A

TITLE Selector Handle 2-Position Door Mount

DRAWING NUMBER D 2501 8001-010