DRAWING NUMBER
D 2202 9000–019

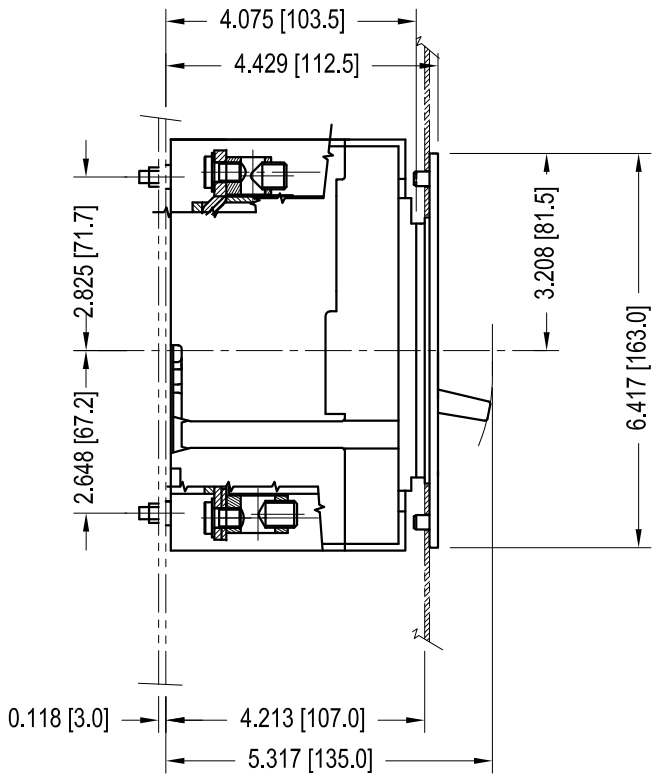

T3S 3 & 4 POLE
SIDE VIEW
WITH FLANGE

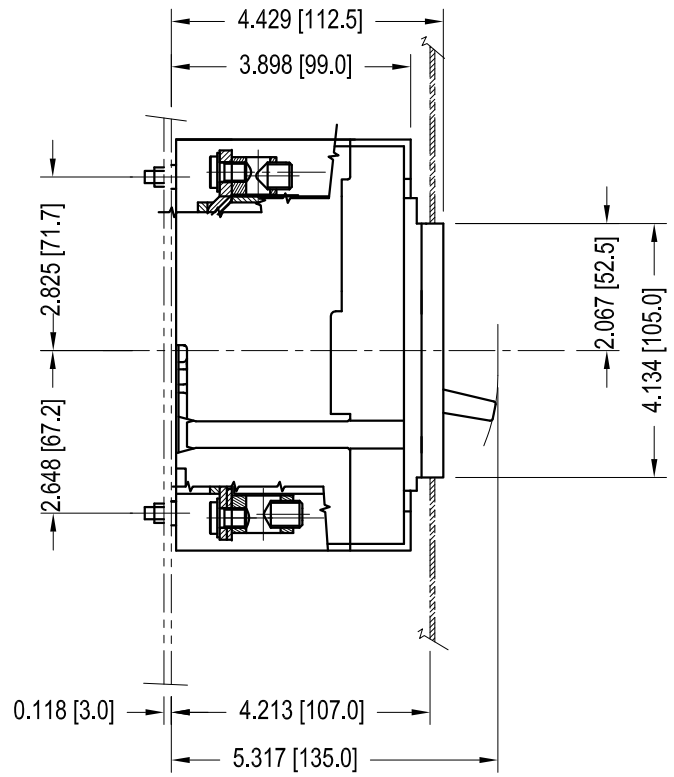

T3S 3 & 4 POLE
SIDE VIEW
WITHOUT FLANGE

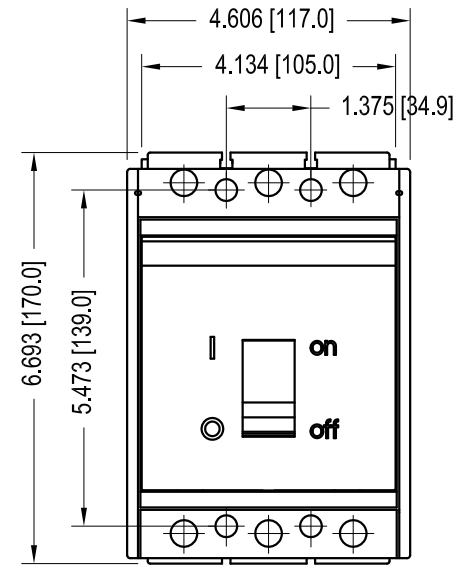

T3S 3 POLE
FRONT VIEW

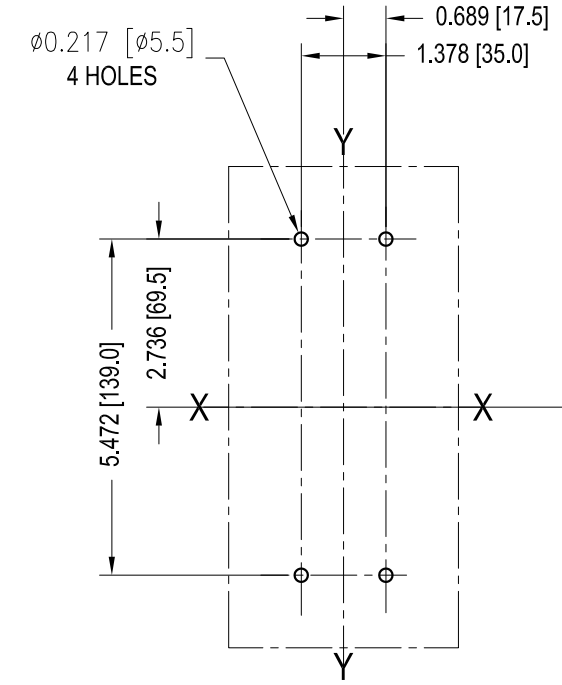

T3S 3 POLE
DRILLING
FRONT VIEW

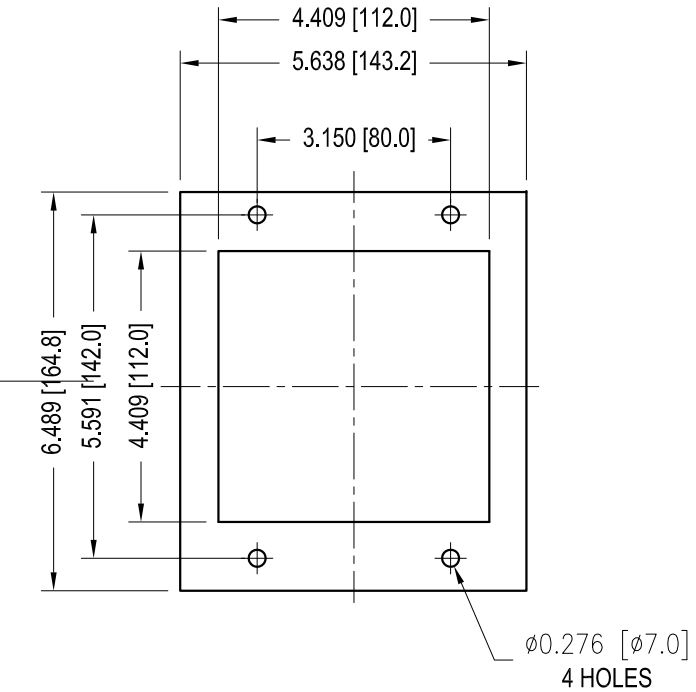

T3S 3 POLE
HANDLE DOOR
CUT-OUT

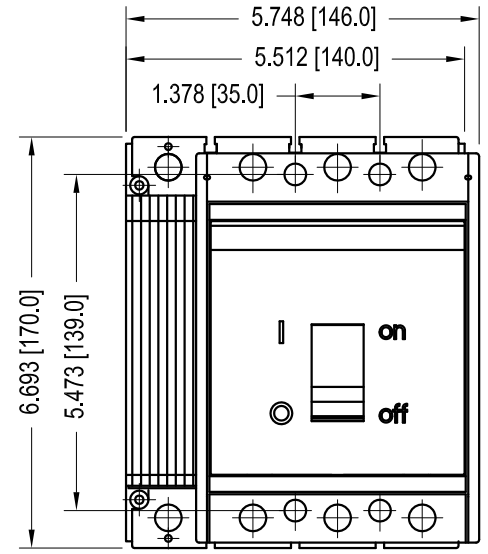

T3S 4 POLE
FRONT VIEW

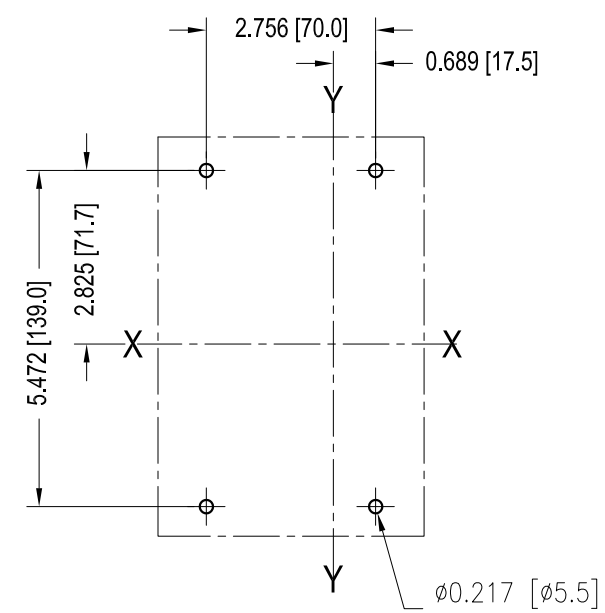

T3S 4 POLE
DRILLING
FRONT VIEW

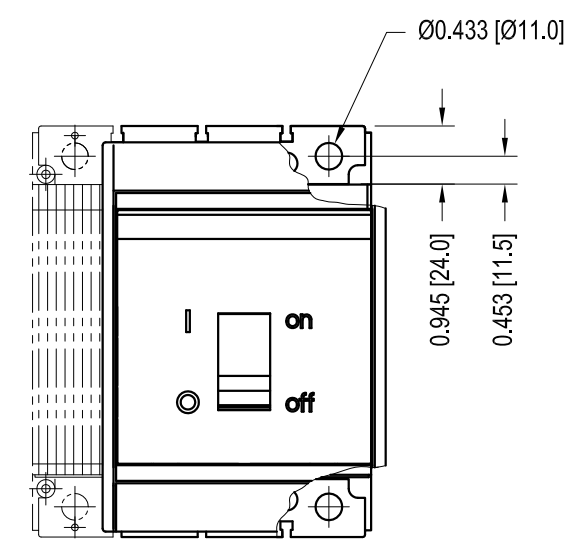

T3S 3 & 4 POLE
FRONT CONNECTION
FRONT VIEW

CUST

REV. LET.	REVISIONS	DATE	REV OR APPD BY	REV. LET.	REVISIONS	DATE	REV OR APPD BY

THIS DRAWING IS THE PROPERTY OF ABB Inc. AND CONTAINS PROPRIETARY AND CONFIDENTIAL INFORMATION WHICH MUST NOT BE DUPLICATED, USED OR DISCLOSED OTHER THAN EXPRESSLY AUTHORIZED BY ABB Inc.

ABB Inc.

DATE 4/4/08
DRAWN BY TSP
CHK'D
PROJECT NO.
SHEET 1 OF 1

REV. A
SIZE B

TITLE TMAX TS3
3 AND 4 POLE
DIMENSIONS & MOUNTING

DRAWING NUMBER
D 2202 9000–019

DRAWING NUMBER
D 2202 9000–019