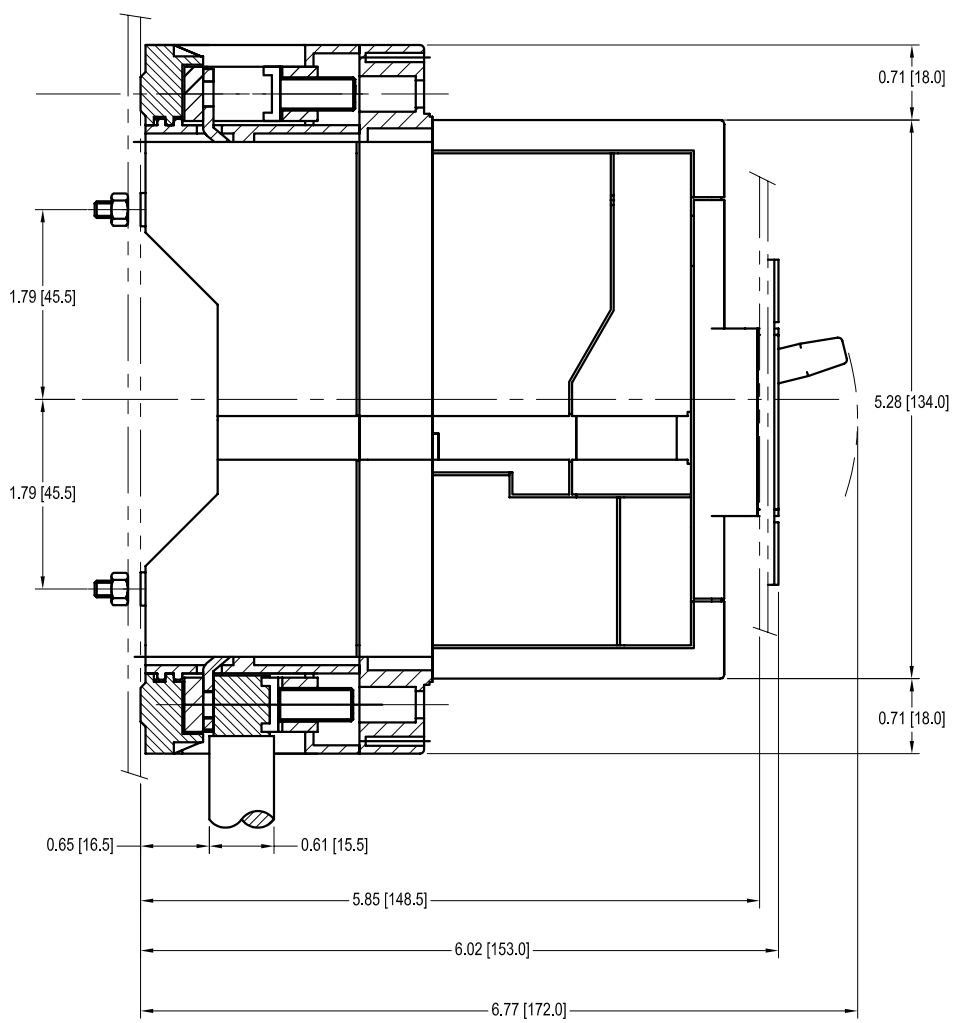

SIDE VIEW

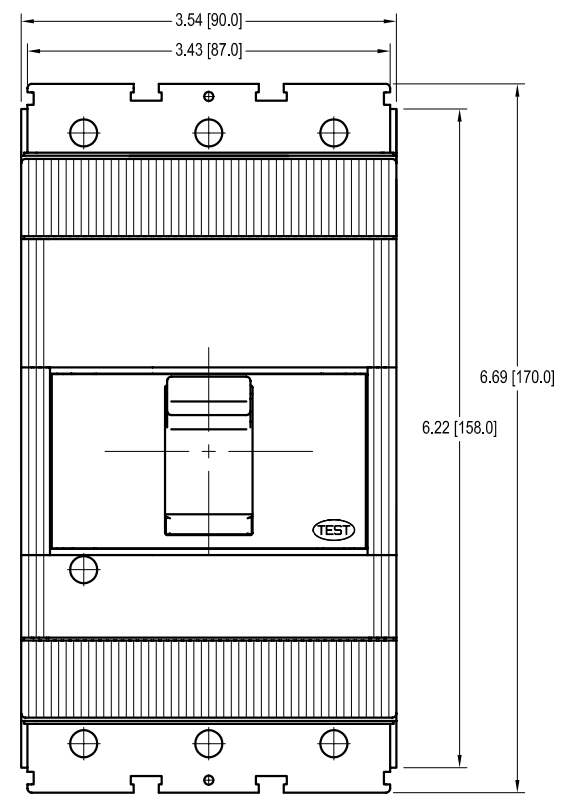

FRONT VIEW

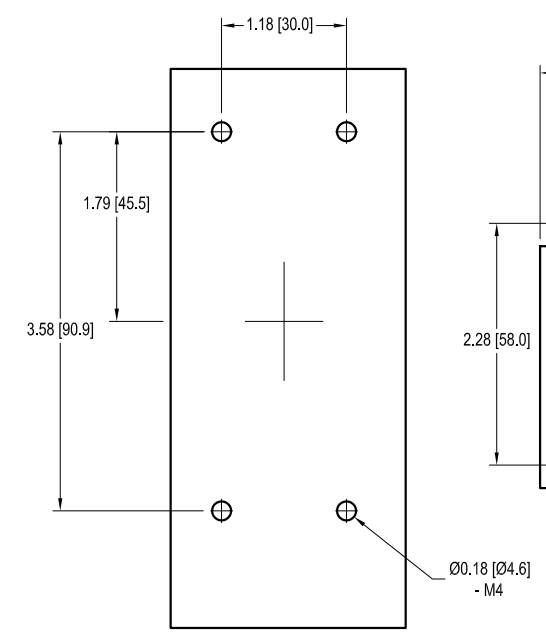

DRILL THRU

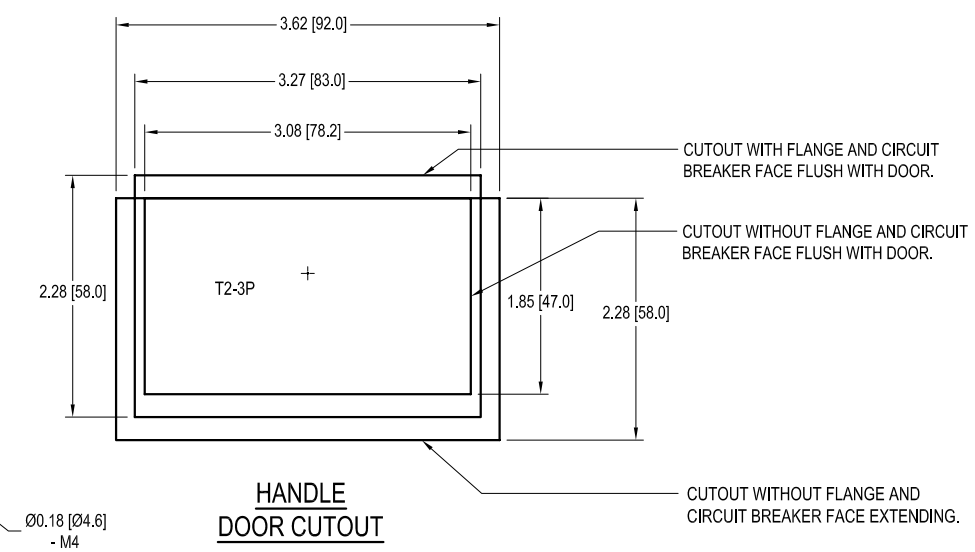

HANDLE
DOOR CUTOUT