DRAWING NUMBER
D 2402 1320-024

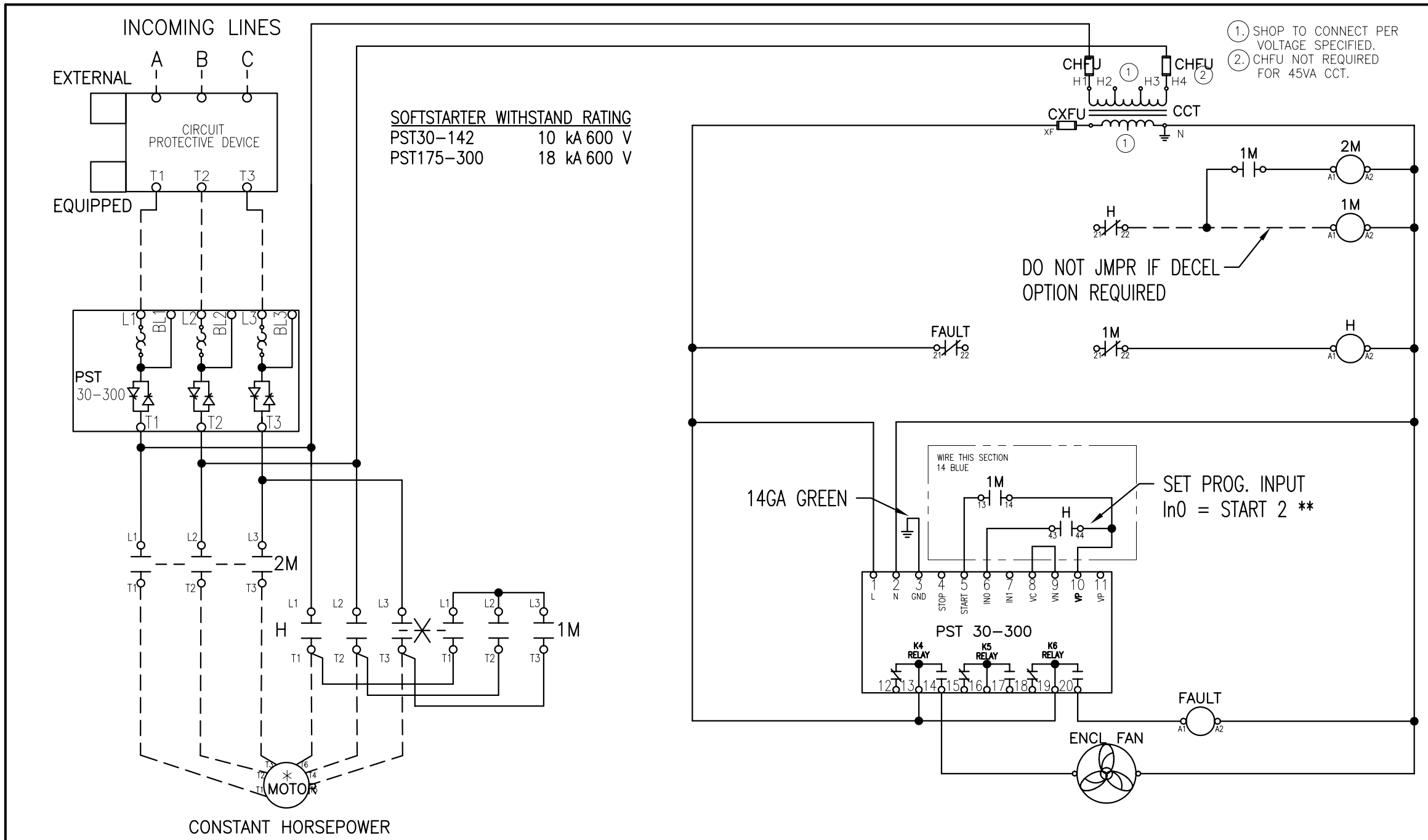


## PILOT DEVICES

NONE

2-WIRE CONTROL

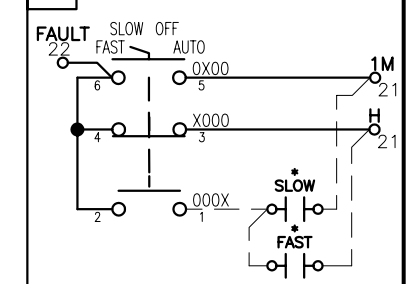


3-WIRE CONTROL

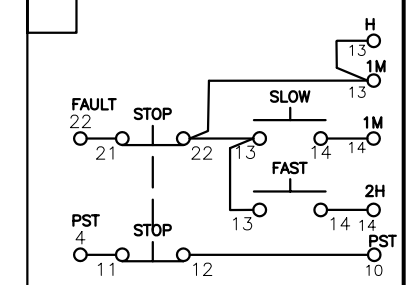


INDICATING LIGHTS

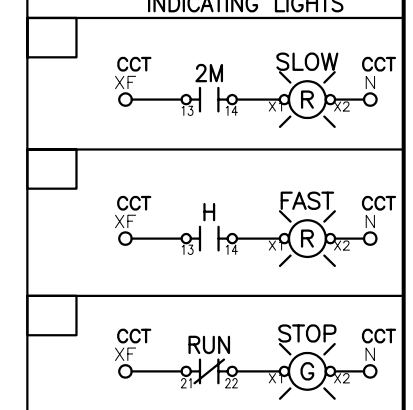


REMOTE STOP

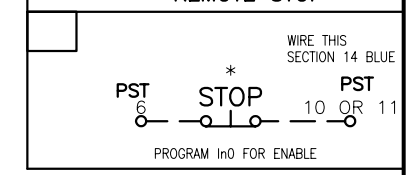


CUST

CONNECTION TORQUE: CONSULT SOFT STARTER MANUAL FOR WIRE TORQUE SPECIFICATIONS.

| LEGEND | |
|---|---|
| CCT | CONTROL CIRCUIT TRANSFORMER |
| CHFU | CCT PRIMARY FUSE |
| CXFU | CCT SECONDARY FUSE |
| B | BYPASS CONTACTOR |
| PTC | THERMISTOR |
| o 13 | CONN POINT ON DEVICE WITH NUMBER |
| * | REMOTE DEVICE |
| ∅ | CONNECTION POINT AT TERMINAL BLOCK |

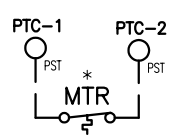


PST NOTES:
1. SET PROG. INPUT In0 = START2 **
2. PROG. RELAY K4 FACTORY SET FOR RUN.
3. PROG. RELAY K5 FACTORY SET FOR AT SPEED.
4. PROG. RELAY K6 FACTORY SET FOR EVENT.
5. FUNCTION MOT 1 Ie MUST BE SET TO MOTOR FLA.
6. IF EQUIPPED, SET EXTERNAL BYPASS = YES **
7. FUNCTION MOT 2 Ie **
8. ADDITIONAL FIELD SETUP FOR START2:
   START RAMP 2
   INIT V 2
   I LIMIT 2
   2nd Ie

NOTES
1. ALL CONTROL WIRING TO BE 14 GA. COLOR OF CONTROL WIRE SHALL BE PER VOLTAGE ON CONTACTOR COILS:
   RED-ALL AC VOLTAGES
   WHITE MAY BE USED ON THE GROUNDED SIDE OF THE AC CIRCUIT IF SPECIFIED.
   BLUE-ALL DC VOLTAGES
2. ALL DEVICES ARE SHOWN DE-ENERGIZED.
3. DO NOT USE SELECTOR SWITCHES WITH AUTO-RESET OVERLOAD RELAYS.
4. PILOT/PROTECTIVE DEVICE BOX WILL BE CHECKED IF MODEL EQUIPPED WITH OPTION. IF NO OPTIONS ARE INSTALLED, BOX MARKED "NONE" WILL BE CHECKED.
5. PIN NUMBERS IN PARENTHESIS ARE COMPACT PILOT DEVICES.
6. SOFT STOP FEATURE NOT AVAILABLE THIS S/D.

| REV. LET. | REVISIONS | DATE | REV OR APPD BY |
|---|---|---|---|
| C | DEL RUN RELAY | 7/29/04 | NJH |
| B | CHANGES PER DRAWING REVIEW | | |

THIS DRAWING IS THE PROPERTY OF ABB Inc. AND CONTAINS PROPRIETARY AND CONFIDENTIAL INFORMATION WHICH MUST NOT BE DUPLICATED, USED OR DISCLOSED OTHER THAN EXPRESSLY AUTHORIZED BY ABB Inc.

ABB Inc.

DATE 6/18/04
DRAWN BY NJH
CHK'D
PROJECT NO.
SHEET 1 OF 1

REV. B
SIZE B

TITLE
S/D PST30-300
TWO-SPD, 1-WDG, CONS HP

DRAWING NUMBER
D 2402 1320-024

DRAWING NUMBER
D 2402 1320-024