DRAWING NUMBER
D 2401 1420-024

TYPICAL COMPONENTS

Amp Min.	Amp Max.	HP@ 480V	MODEL	SFT STR	E-BYP CNTR	OL	CCT	MCCB
9	14	10	T010L1-48	PST30-600-70	A26-30-10-84	TA25DU14	T4050PSF1	S3N020
9	27	20	T020L1-48	PST30-600-70	A26-30-10-84	TA25DU32	T4050PSF1	S3N040
12	34	25	T025L1-48	PST37-600-70	A30-30-10-84	TA42DU42	T4050PSF1	S3N050
15	40	30	T030L1-48	PST44-600-70	A40-30-10-84	TA42DU42	T4050PSF1	S3N060
15	52	40	T040L1-48	PST50-600-70	A50-30-11-84	TA75DU63	T4075PSF1	S3N080
23	65	50	T050L1-48	PST72-600-70	A63-30-11-84	E200DU200	T4075PSF1	S3N100

NOTES:
TYPICAL COMPONENTS BASED ON 480 V AND 120 V CONTROL VOLTAGE. FOR OTHER THAN CLASS 10 LINE START OR MINIMUM LOAD AMPS, CONTACT FACTORY.

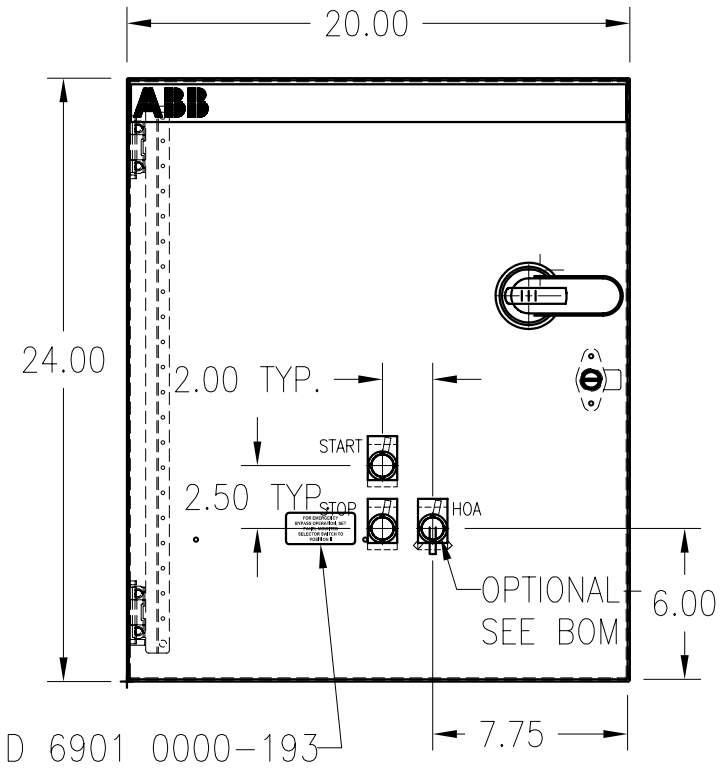

FRONT VIEW

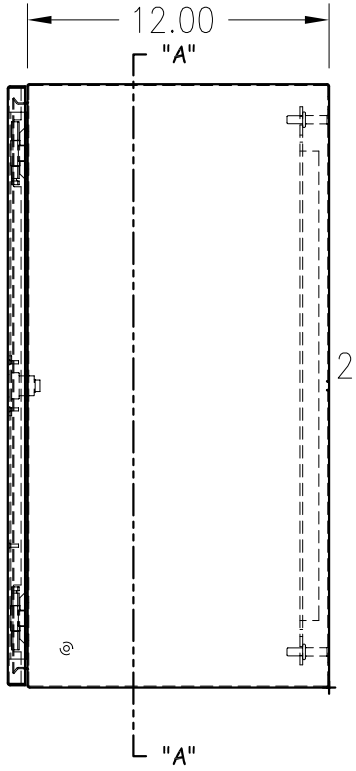

SIDE VIEW

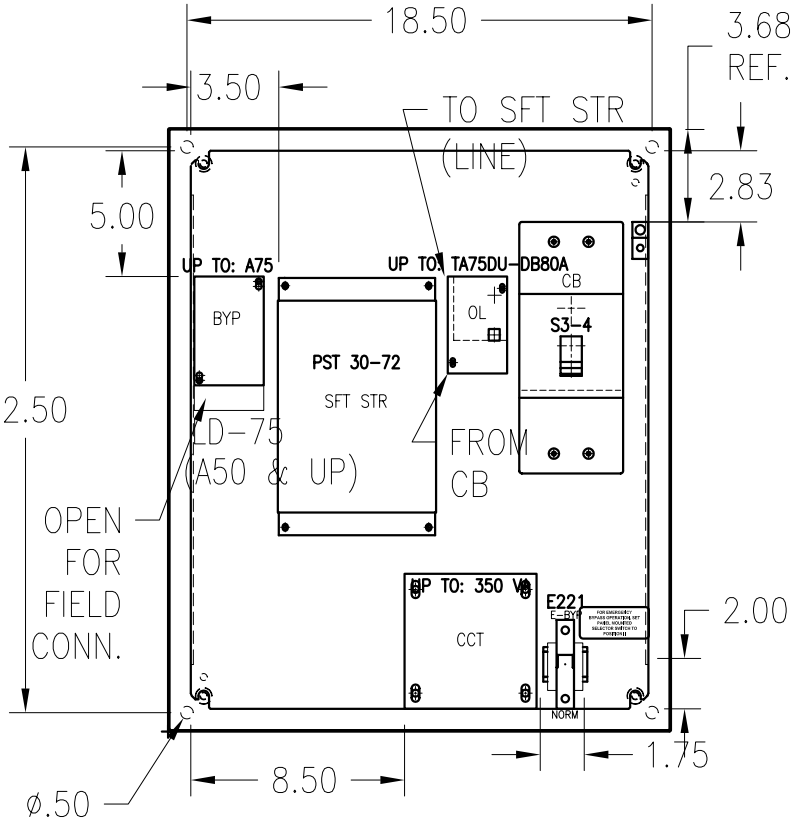

SECTION "A"-"A"

MOUNTING PLATE
22.20" X 18.20"

NOTES:

1) IF EQUIPPED, PLACE RUN LIGHT ABOVE DEVICE USED TO STOP MOTOR.
2) FOR MODELS EQUIPPED WITH NORMAL START-STOP, PLACE SECOND STOP TO RIGHT OF NORM/E-BYP SWITCH. PLACE RUN LIGHT ABOVE NORM/E-BYP IF REQUIRED.

SHOP/WEB

REV. LET.	REVISIONS	DATE	REV OR APPD BY
C	PST H-DIM WAS 0, B H-DIM WAS 5 NORM-E-BYP SW WAS DOOR MTD	2/21/05	NJH
B	ADD COMPONENT TABLE	10/12/04	NJH

DO NOT SCALE DRAWING
SCALE 3/32 — DIMENSIONS ARE IN INCHES
Material: C-SD242012 NEMA 4,12 24X20X12
Finish:
STANDARD TOLERANCES: 2 PL DEC. ±.030 | 3 PL DEC. ±.030 | ANGLES ±1°

THIS DRAWING IS THE PROPERTY OF ABB Inc. AND CONTAINS PROPRIETARY AND CONFIDENTIAL INFORMATION WHICH MUST NOT BE DUPLICATED, USED OR DISCLOSED OTHER THAN EXPRESSLY AUTHORIZED BY ABB Inc.

ABB Inc.

DATE 10/3/03
DRAWN NJH
CHK'D
APPR'D
PAGE 1 OF 1

REV. C
SIZE A

TITLE
PANEL LAYOUT SFT STR
PST30-75,N1,12,4,3R,CB

DRAWING NUMBER
D 2401 1420-024